SETUP SHEET

Name: JOHAN CATILINA | Date: 02 septembre 2012 | Event: CHALENGE MBRC MEUX

Track Conditions: Outdoor ☑ Open ☑ Loose/Loamy ☐ Dusty ☐ High Bite ☐ Low Bite ☐ Rough ☐
Indoor ☐ Tight ☐ Smooth ☐ Hard Packed ☐ Wet ☐ Dry ☐ Med Bite ☐ Blue Groove ☐

BUMPSTEER/ACKERMANN/SERVO SAVER

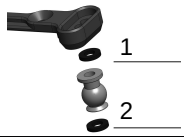

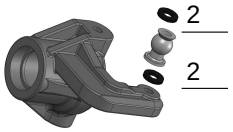

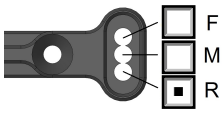

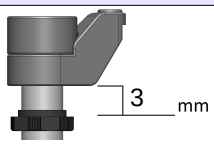

FRONT

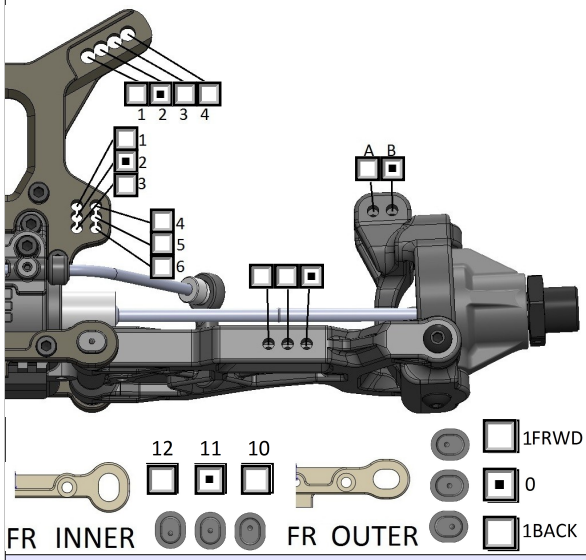

SUSPENSION

	Front	Rear
Ride Height	23	27
Camber	1.5	1.5
Toe		
Sway Bar	2.3	2.3

WING

Brand:

Type:

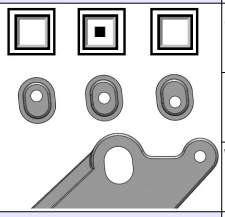

SHOCKS

	Front	Rear
Piston	orig	orig
Oil	45	40
Bladder		
Spring		
Length/ Droop	105	120

TIRES

	Front	Rear
Brand		
Compound		
Insert	Freeride	Enforcer
Wheel	Beta	Beta

REAR

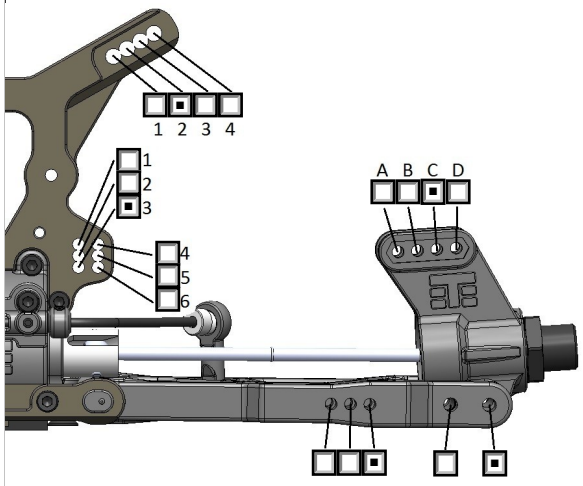

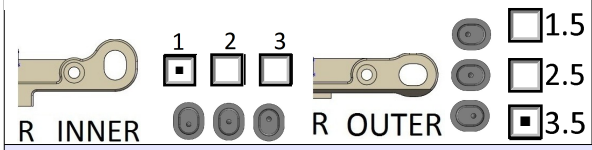

BRACES

☑ Front ☑ Middle ☑ Rear
(Front is always recommended)

WHEELBASE

2 ___ mm 3 ___ mm

F R

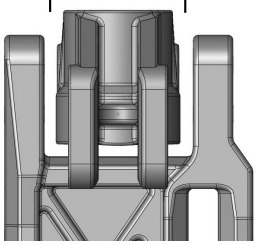

DRIVETRAIN

Gear Ratio: 18_19 / 44

☒ Pinion ☐ Long Shank
☐ Traktion ☐ Clutch
☐ Mech. Brake
☒ Motor Brake

Radio Notes:

Notes:

DIFFS

Front	Center	Rear
10	7	3

ELECTRONICS

ESC: SC 8
Battery: TECPOWER
Servo(s): SAVOX
Radio: SPECTRUM
Motor: LEOPARD 1800KV

Spur: ☐ Metal ☒ Plastic
Shoes:
Springs:

NOTES:

PISTE TRES DEFONCER ET POSIEREUSE APRET MIDI ; L'EGEREMENT HUMIDE LE MATIN